Columbus McKinnon Corporation
Getzville, NY USA

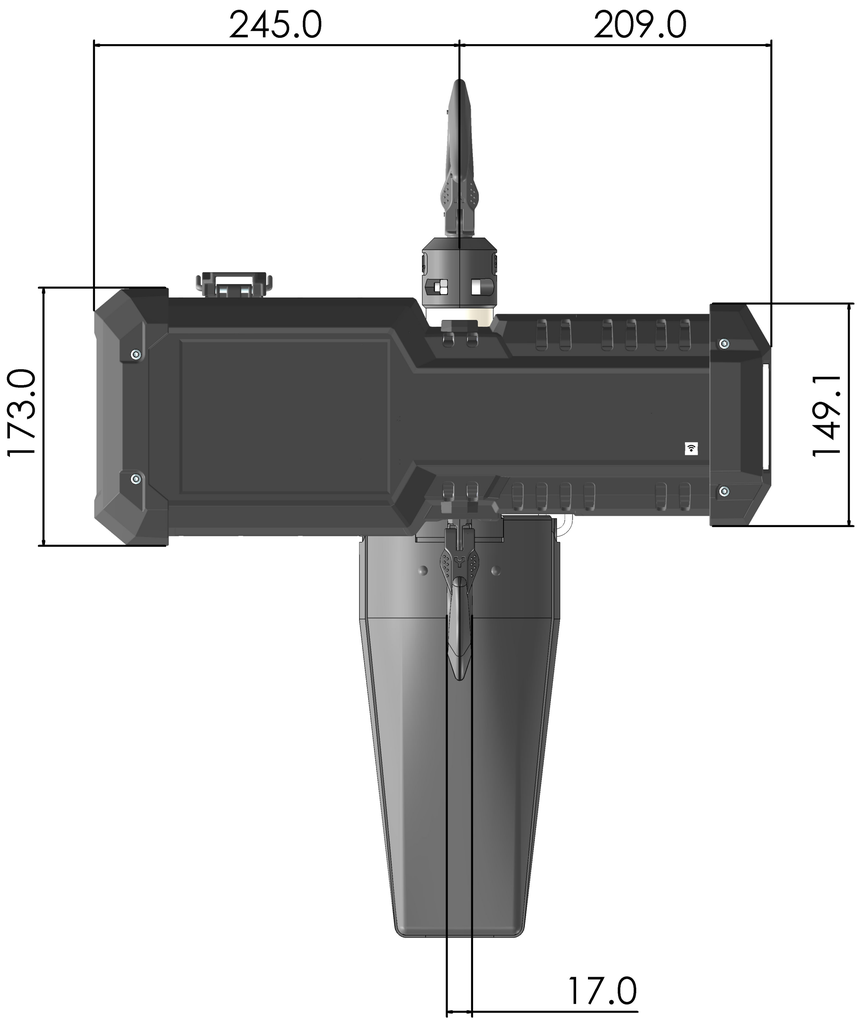

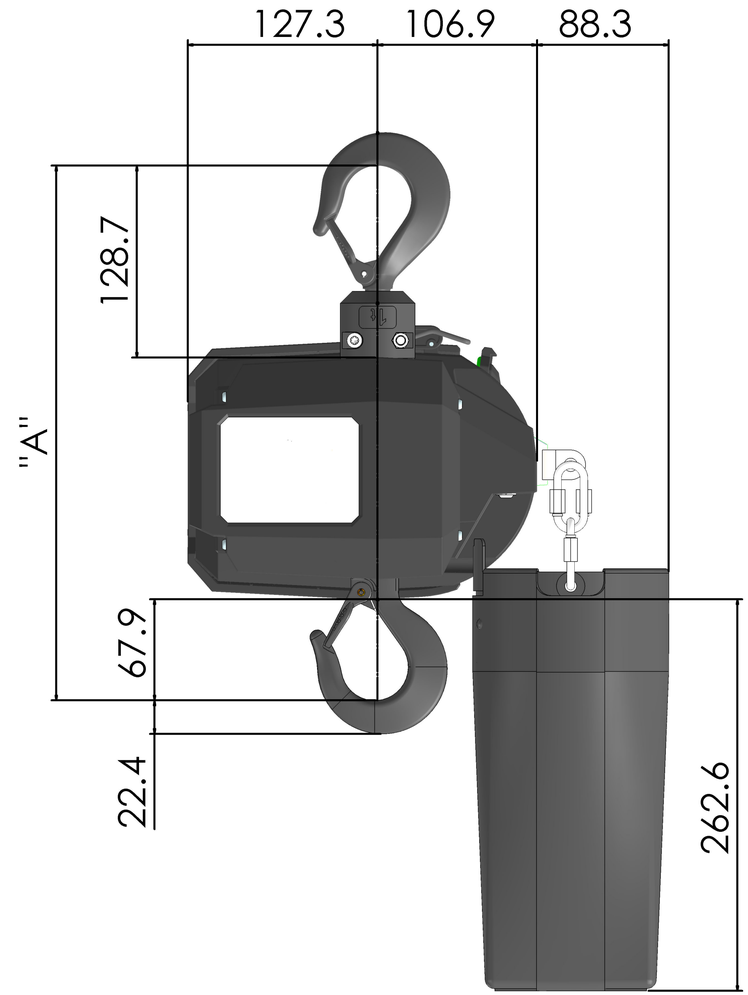

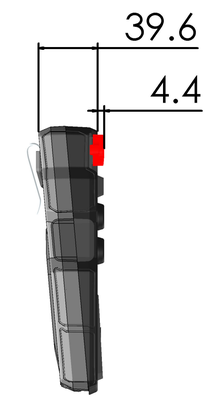

HEADROOM	
HOOK TYPE	DIMENSION "A" (mm)
RIGID	370.8
SWIVEL	401.4

*ALL DIMENSIONS IN MM

THIS DOCUMENT CONTAINS PROPRIETARY INFORMATION OF COLUMBUS MCKINNON CORPORATION.
COPYING, DISTRIBUTION, DISCLOSURE OR USE OF THIS DOCUMENT WITHOUT WRITTEN PERMISSION OF COLUMBUS MCKINNON CORPORATION IS PROHIBITED.
THIS DOCUMENT AND THE INFORMATION CONTAINED HEREIN IS THE PROPERTY OF COLUMBUS MCKINNON CORPORATION. ALL RIGHTS, INCLUDING BUT NOT LIMITED TO, COPYRIGHT, PATENT, TRADEMARK AND TRADE SECRET RIGHTS, ARE RESERVED. ANY USE, DISCLOSURE, REPRODUCTION, OR DISTRIBUTION OF THIS DOCUMENT OR ANY PART THEREOF WITHOUT THE EXPRESS PERMISSION OF COLUMBUS MCKINNON CORPORATION IS PROHIBITED.

ALL MATERIALS MUST COMPLY WITH EU REACH, ROHS AND WEEE DIRECTIVES, COMPLIANCE IS STANDARD

Material:		Finish:					
Tolerances:							
Linear:							
Angular:							
Standard:							
Applied to:							
Drawn:		Date:		Columbus McKinnon Corporation			
Checked:		Date:		Hoist & Rigging Americas			
Approved:		Date:		Getzville, New York			
Weight:		Scale:					

FINAL ASSEMBLY
BATTERYSTAR
ELECTRIC CHAIN HOIST