Green Pin® Standard Shackles
Group : G-4163
Part : GPGHMB16
WLL : 3.25 t

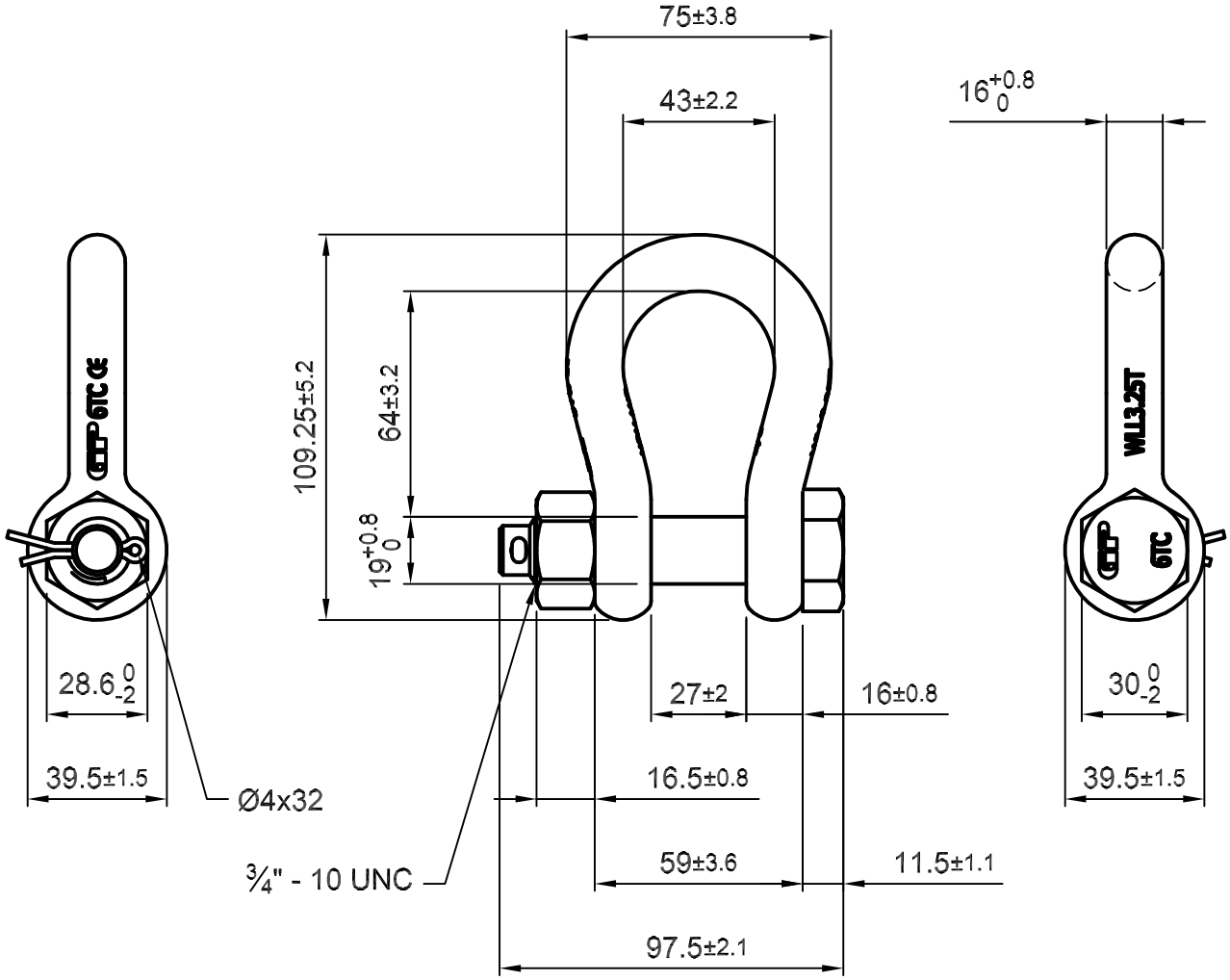

We reserve the right to make amendments on specifications in this drawing without prior notification.

Rev.	Description	Date	Drawn
0	First Issue	31-07-09	H.T.

Copyright by Van Beest B.V. moreover this document is the property of Van Beest B.V. This document or any part of it may neither be made known, copied or multiplied, nor used for any purpose other than that for which it is specifically furnished, without the prior written consent of Van Beest B.V.

VAN BEEST
P.O. Box 57, 3360 AB Sliedrecht
(The Netherlands)
Industrieweg 6, 3361 HJ Sliedrecht
Tel. 0184-413300 Fax. 0184-413101

Format A4
Scale 1:2

Title: Green Pin® Standard Shackles bow shackles with safety bolt

Remark: G-4163 GPGHMB16

Drawing number: 5005

Rev.: 0